WE MAKE THE BEST BOATS BETTER!™

The world leader in
trim tab, trolling motor and hatch lift innovation.

LENCO MARINE INC.
LENCO™
STUART, FL

OWNER'S MANUAL

Lenco power explained...

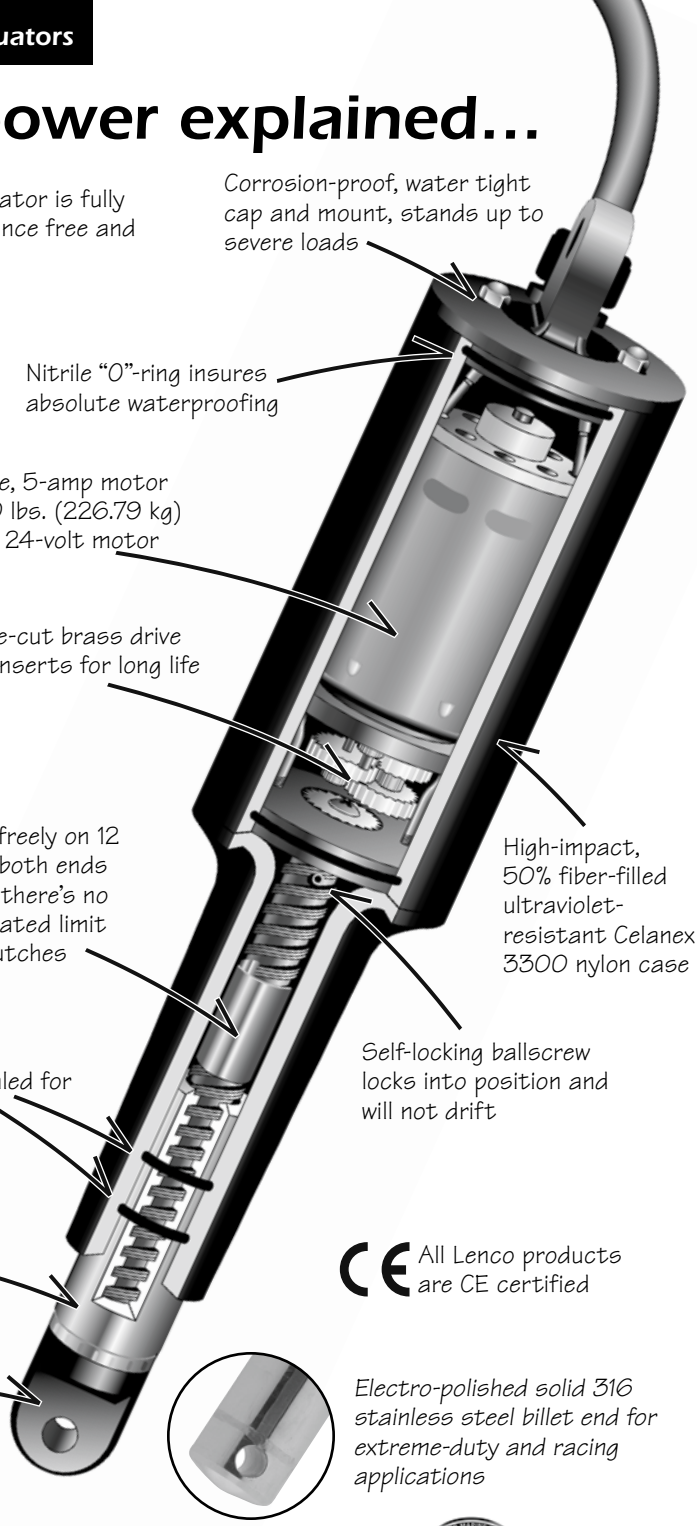

The entire Lenco Actuator is fully submersible, maintenance free and sealed for life

Corrosion-proof, water tight cap and mount, stands up to severe loads

Nitrile "O"-ring insures absolute waterproofing

Tough, high-torque, 5-amp motor easily moves 500 lbs. (226.79 kg) Available in 12- or 24-volt motor

Precision, machine-cut brass drive gears with steel inserts for long life

Ballscrew spins freely on 12 ball bearings at both ends of its stroke so there's no need for complicated limit switches and clutches

High-impact, 50% fiber-filled ultraviolet-resistant Celanex 3300 nylon case

Self-locking ballscrew locks into position and will not drift

Dual Nitrile "O"-ring sealed for maximum protection

Stainless steel ram won't flex, even under extreme loads

All Lenco products are CE certified

Corrosion proof Vandar mounts always look great

Electro-polished solid 316 stainless steel billet end for extreme-duty and racing applications

CONGRATULATIONS!

You have just purchased the finest, high performance trim tab system in the world! Welcome to the future.

Lenco Trim Tabs make the single most important difference in the way your boat rides and performs. Lenco Trim Tabs make your boat ride smoother, drier, faster, with increased fuel efficiency and safety whether on a small skiff or a mega-yacht. Lenco's ballscrew design is more reliable, twice as powerful and features an instant response, making them very user friendly compared to typical hydraulic trim tabs. Lenco Trim Tabs are oil free and are environmentally friendly. Our goal is to manufacture products that simply make boating more enjoyable.

Trim Tabs - Standard & Edge Mount

Lenco Drive 164 Trolling Motor System

High Performance Tabs - Standard, HD & XD

Troll'n Tabs - Standard & Edge Mount

Contents

Trim Tab Operation

The Lenco Tactile Switch is based on the position of the bow.

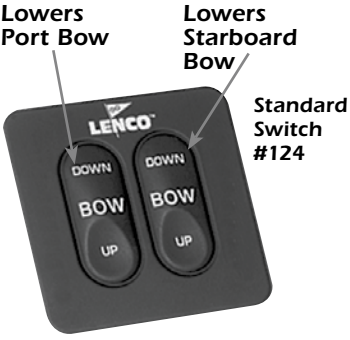

Without Trim Tabs

With Trim Tabs

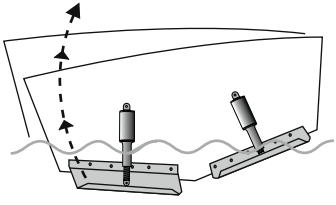

When the tabs are lowered, the water flow is redirected creating an upward force at the stern of the boat.

Lenco Trim Tab kits include two stainless steel planes, two electromechanical actuators and all mounting hardware for installation. (See available switch options on page 13.) The trim tabs operate independently of one another to provide optimal performance by redirecting water flow at the transom of the boat. Lenco Trim Tabs have been designed to improve the overall attitude of a boat. If used properly, Lenco Trim Tabs improve the ride, reduce drag, increase speed and improve the fuel efficiency of your boat.

The operation of Lenco Trim Tabs is basic. The two stainless steel planes are mounted with the actuators on the transom of the boat. When the tabs are lowered, the water flow is redirected creating an upward force at the stern of the boat. When the stern rises, the bow will lower.

Since Lenco actuators are electromechanical, they provide an immediate response at the touch of the switch. The Lenco switch is based on the position of the bow. The left side of the switch controls the starboard tab. The right side of the switch controls the port tab. The system is set up this way to minimize the guesswork while underway. To lower the starboard bow, press the right (starboard) switch where it reads DOWN. To lower the port bow, press the left (port) switch where it reads DOWN.

Since all boats are different in weight, length, speed and performance, it takes practice to understand how your boat reacts with trim tabs installed. Lenco Trim Tabs allow your boat to get on plane faster and continue planing at lower speeds. This improves visibility and the overall safety of your boat. When making adjustments with the trim tabs, use short momentary taps of the switch.

To become knowledgeable on how your boat performs with Lenco Trim Tabs, remember, practice makes perfect.

Lenco electromechanical actuators provide an instant response. When making adjustments, use short momentary taps of the switch.

SPECIAL CONDITIONS

HEAD SEA

Head Sea — Lower both tabs slightly by pressing BOW DOWN on both sides. This brings bow down while maintaining speed. This adjustment allows the hull of the boat to absorb the impact of the waves, resulting in a more efficient and smoother ride.

FOLLOWING SEA

Following Sea — Make sure the tabs are fully retracted by pressing BOW UP on both sides. This brings both tabs to a fully retracted position decreasing lift in the stern, allowing the bow to rise. If tabs are deployed, the bow may dig.

WINDY CHOP

Windy Chop — To raise the windward side of the boat press BOW UP on that side. If this is not sufficient, press BOW DOWN on the leeward side of the boat. Do not overtrim when attempting this. This allows the windward side of the boat to rise and minimizes spray.

SHALLOW WATER HOLE SHOT

Shallow Water/Hole Shot — Lower both tabs completely down by pressing BOW DOWN on both sides. This provides lift in the stern of the boat and keeps the bow down. As you throttle up and speed increases, raise tabs by pressing BOW UP on both sides.

UNEVEN LOAD

Uneven Load — If one side of the boat is higher than the other while running, press BOW DOWN on the switch on that side. This lowers the tab on the listing side (low side) to bring the boat level.

PORPOISING

Porpoising — To stop porpoising, press BOW DOWN on both sides of the switch. The tabs need only to be deployed slightly to correct this adverse situation.

SAFETY

While the boat is underway, do not move one tab up or down significantly; this may cause listing.

While at higher speeds, do not overtrim. This causes the bow to lower quickly, resulting in a reduction of speed and may cause the boat to veer.

When in following seas or when running an inlet, the tabs should be fully retracted. This allows for optimal performance.

While operating trim tabs, use caution. Improper use of trim tabs may cause accidents and/or injury.

1	Stainless steel blade with hinge	B-9x12 (dimensions of tab)	
2	Electromechanical Actuator	#101, #101 XD, #101 XDS	
3	Upper mounting bracket		#118
4	Space saver upper mounting bracket (optional)		#117
5	Lower mounting bracket		#119
6	RetroFit Kit bracket		#116
7	Delrin pin		#121
8	#124 Standard Tactile Switch (optional)		#124
9	#124 R Standard Tactile Switch w/Retractor (optional)		#124 R
10	#123 L.E.D. Indicator Switch w/Retractor (optional)		#123
11	#123 DR Dual Actuator L.E.D. Indicator Switch w/Retractor (optional)		#123 DR
12	Shim kit (optional)		#118S
13	1 1/4" (3.17 cm) stainless steel sheet metal screw		
14	20 (7/8" x 1/4", 2.22 x .63 cm) stainless steel screws		
15	20 (1/4", .63 cm) machine lock nuts		

Troubleshooting Guide for Trim Tabs

Trim tabs do not work together, independently or intermittently.

Solution Sequence:

1) Inspect fuse at fuse panel. Replace if necessary.
2) Verify that all connections at switch control box are tight and in place.
3) Make sure that switch assembly has a solid ground.
4) If the actuator cables were spliced inside the transom, inspect joint for positive connection.
5) If, after following steps stated above, the actuators still do not operate properly — STOP and call the factory for further assistance at 772-288-2662.

Additional Information

- Check electrical connections behind switch and make sure ground wire is in place.
- The addition of a zinc anode will deter electrolysis. It is important that the zinc is in contact with the trim tab blade.
- To discourage any marine growth on tab or actuator, antifouling paint can be applied. When applying paint to the actuator, make sure it is fully retracted. Do not paint the stainless ram above the area that is exposed when retracted.
- If tabs malfunction or tabs become stuck in the down position while underway, remove pin or bolt at the lower mounting bracket.
- To reposition the actuator turn stainless steel ram clockwise and reattach. You can also resecure the tab manually by fastening the lower mounting bracket.

Trim Tab Installation Instructions

Warning: The following instructions contain important safety information and should be followed carefully. Failure to do so may result in injury and will void warranty.

Please read complete instructions before starting application!

TOOLS AND MATERIALS LIST

- Electric drill
- Wire crimper/cutter
- Tape measure
- 3/16" & 3/8" drill bits (.48 & .95 cm)
- 7/16" (1.11 cm) wrench
- Small hammer
- 4' (1.22 m) level
- Straight edge
- 3M 5200 adhesive caulking
- 2" (5.08 cm) hole saw
- #2 & #3 Phillips screwdrivers
- 3M silicon marine sealer

1. Begin by first deciding where the trim tab kit will mount. **Note:** When laying out desired tab location, hold tab against transom 3/8" (.95 cm) up from bottom of transom in line with hull. Make sure not to mount inside corner of hinge within 2" (5.08 cm) of a strake edge. If this is not possible, move tab so as to cover strake edge (see Fig.1).

Note: High Performance tabs should be mounted with tapered end toward center of boat.

Fig. 1

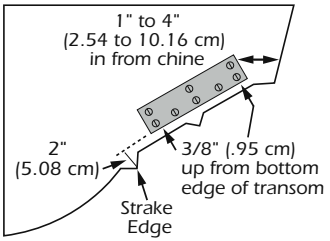

2. Using the 3/16" (.48 cm) drill bit, drill hinge holes to a depth of 1-1/4" (3.17 cm). When drilling tab and bracket holes, you may drill through the transom; the screws **will** seal the holes when inserted. All screws and fasteners are stainless steel. Do not use any other type of metal. **It is recommended to use 3M 5200 adhesive caulking to bed the hinge and screws.** Next, mount the hinge to the boat using the #14 x 1-1/4" (3.17 cm) stainless steel sheet metal screws.

3. With bolts, washer, and nylon locking nuts provided, fasten lower mounting bracket to tab. Attach the actuator to the brackets top and bottom using the Delrin pin provided. (When mounting racing tabs, substitute delrin pin with 5/16 x 1" stainless steel bolt provided. In order to position upper bracket against transom, you must lift trim tab so that the trailing edge is approximately 5/8" above a straight edge held to hull. This 5/8" measurement is for all tabs that have a trailing edge 9" off of the transom. If the trailing edge is 12" off of the transom, lift the tab so there is 3/4" between the tab and the straight edge (see Fig. 2). When the tab is at the appropriate level, use the two outside holes of the upper bracket as a guide to mark mounting location. Mount upper bracket where it lays naturally against the transom to prevent binding during travel. (Do not adjust the upper bracket to the right or left, this will cause binding.) Remove upper bracket from actuator to mark upper screw hole. Drill three 3/16" holes 1-1/2" deep.

4. **Warning: With some installations, fuel, water tanks or other systems may prevent the actuator wire from entering the hull through the upper mounting bracket. Be sure to check inside hull before drilling 3/8" (.95 cm) wire hole. Using the centered hole in the upper mounting bracket as a guide, mark the wire hole.** If all is clear, use the 3/8" (.95 cm) drill bit. Drill completely through the transom. Pass the actuator cable through. **Remove slack on wire into hole and seal with clear caulking or 3M 5200. DO NOT OVERTIGHTEN.** If, however, you are prevented from drilling hole through bracket, simply drill a 3/8" (.95 cm) hole 4" to 5" (10.16 to 12.7 cm) above waterline and insert wire. Cover hole and wire with a clamshell vent sealed with clear caulking for a waterproof and finished effect. To attach actuator to the upper bracket use black delrin pin or stainless steel bolt provided. Mount upper bracket using the three 1-1/4" S.S. sheet metal screws. (We recommend using 3M 5200 adhesive caulking to bed the screws and bracket.

5. At the helm, find a good location for the tactile switch and cut a circular opening using a 2" (5.08 cm) hole saw. Before cutting, make sure the area inside the helm is clear of wires and other equipment that could be damaged. Using the template on page 35, mark each stud location and drill four 3/16" (.48 cm) holes through the helm. If the thickness of the helm is less than 1-1/4" (3.17 cm), secure the switch with the nylon nuts provided. If the thickness of the helm exceeds 1-1/4" (3.17 cm), apply a marine grade silicon sealer to each of the four drilled holes, to each stud and around the back of the tactile switch. Secure the switch and allow sealer to dry. When mounting the black control box, keep in mind that there is a 3' (.91 m) lead that attaches to the back of the tactile switch. Make sure control box is mounted with wires facing down toward deck.

6. Following the trim tab switch wiring diagram, pull the 25' (7.62 m) cylinder wires to the switch location. Be very careful of sharp edges that may damage the cable. Make all connections according to diagram. Remember the **left** switch controls the **right** starboard tab and the **right** switch controls the **left** port tab.

Fig. 2

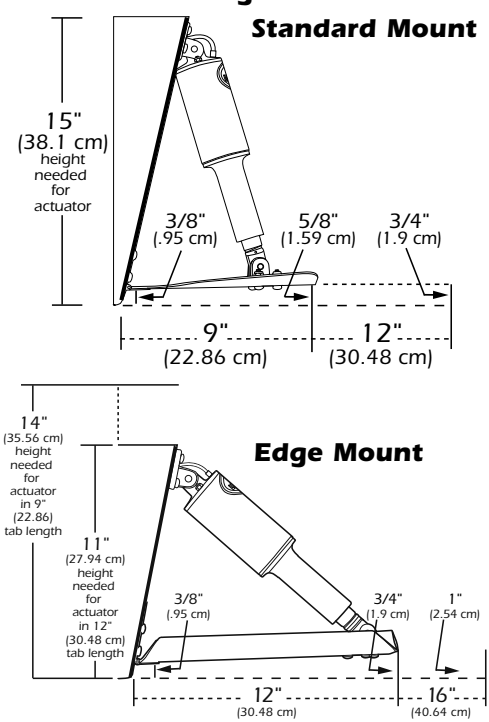

Please follow the instructions and drawings carefully. Call the Lenco Service Department at 772-288-2662 for technical assistance.

L.E.D.Trim Tab Indicator Switch w/Retractor Wiring Diagram - Part #123

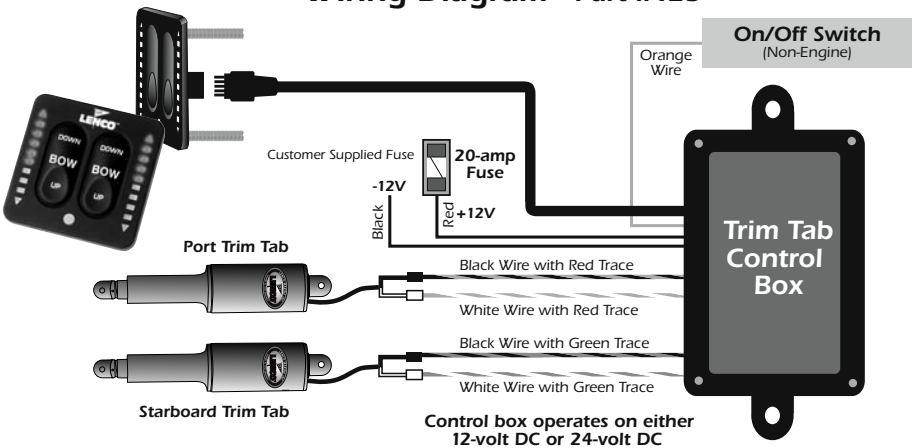

This product must be installed and wired exactly as shown above. Failure to wire the trim tab retractor as shown will cause cancellation of all warranties by the manufacturer.

Switch Template Page 35

Note: In all cases, make sure control box is mounted with wires facing down toward deck.

Standard Tactile Switch Wiring Diagram Part #124

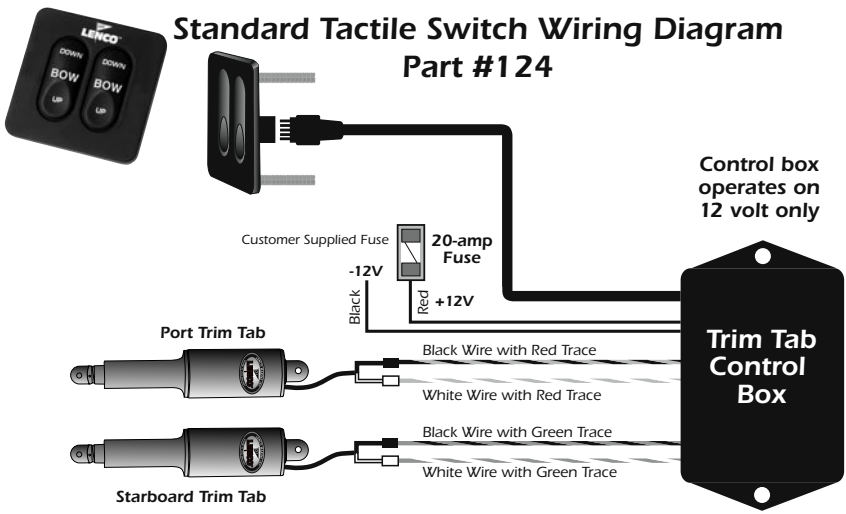

Dual Station Flybridge Wiring Diagram
for Switches #123, #123 TNT, #124, #124 R and Dual Ram Switches

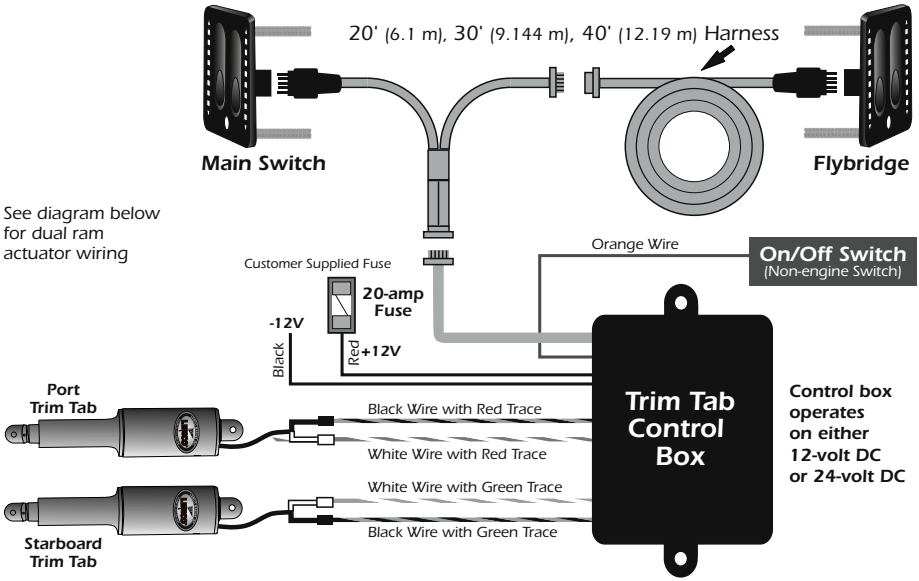

This product must be installed and wired exactly as shown above. Failure to wire the trim tab retractor as shown will cause cancellation of all warranties by the manufacturer.

Dual Actuators L.E.D.Trim Tab Indicator Switch w/Retractor Wiring Diagram-Part #123 DR

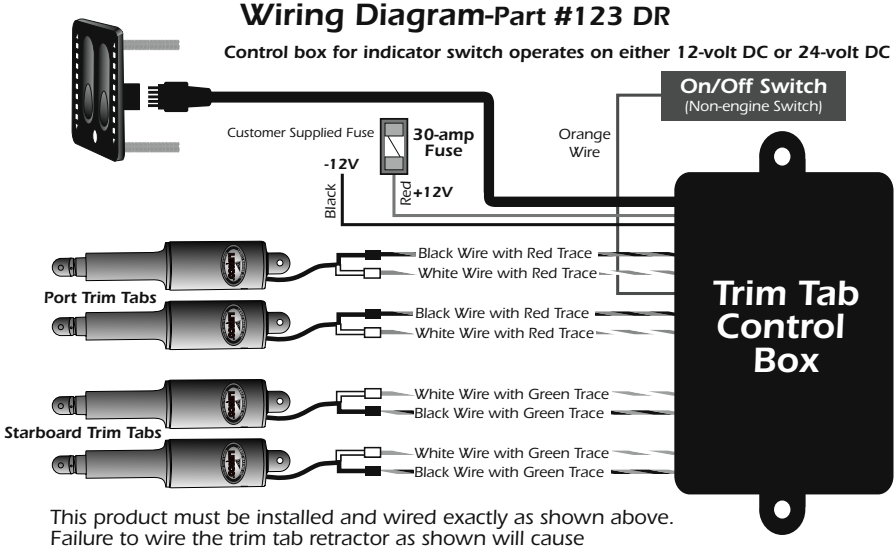

This product must be installed and wired exactly as shown above. Failure to wire the trim tab retractor as shown will cause cancellation of all warranties by the manufacturer.

Lenco Trim Tabs, Switches and Bennett RetroFit Kits carry a 3-year limited warranty from the date of original purchase.

When possible, please refer to our troubleshooting guide on our website, http://www.lencomarine.com prior to processing your claim with the Lenco factory.

1. Call Lenco Marine at 772-288-2662, and ask for customer service. Give the technician a brief description of the product and the problem. Once the tech determines that the product is eligible for repair or replacement, they will issue you an RMA number (Return Merchandise Authorization). **Claims will not be processed without an RMA number.**
2. Return product and paperwork to Lenco Marine with the following information: name, telephone number, description of problem, proof of purchase to verify warranty. Proof of purchase and warranty info can consist of the following:
   A. Original Lenco Marine invoice or copy.
   B. Lenco Dealer invoice.
   C. Factory installed bill of sale.
3. Mark the outside of the package with the RMA number and return it to Lenco Marine Customer Service Department at 4700 SE Municipal Court, Stuart, FL 34997 for processing. Once received, our Customer Service Department will make every effort to process your return quickly. Should time restraints prohibit you from sending in the merchandise first, or you need an immediate replacement, you will be required to secure the replacement part with a credit card prior to shipment (Visa, MasterCard, American Express, Discover). Lenco Marine ships all warranty items UPS ground. Costs for upgrades in shipping are the responsibility of the customer. Lenco Marine warranties all trim tabs, switches or Bennett RetroFit Kits for a period of 3 years from the date of original purchase. If any part of a Lenco Trim Tab, switch or Bennett RetroFit Kit fails due to manufacturing defects or workmanship within a period of 3 years from the date of original purchase, Lenco Marine will repair or replace the part(s) without charge at our discretion. No haul out, labor or miscellaneous charges are covered under this warranty. Warranty is not transferable.

Troll'n Tab customers please see separate warranty policy. The foregoing is in lieu of any and all other warranties, expressed or implied, including any warranty of merchantability or fitness for a particular purpose. There are no other warranties which extend beyond that set forth above. Lenco Marine reserves the right to void any warranty claim if the part is opened or repair was attempted, without prior authorization from Lenco Marine.

Lenco Marine, Inc.
Phone: 772-288-2662
Fax: 772-288-2566
www.lencomarine.com
4700 SE Municipal Court
Stuart, Fl 34997

Complete your trim tab system with the latest switch technology — totally waterproof, maintenance-free, easy-to-install tactile switches.

Lenco Switch Options

#124 - Standard Tactile Switch for all trim tabs and Troll'n Tabs
#124 R - Standard Tactile Switch w/Retractor for all trim tabs
#123 - L.E.D. Indicator Switch w/Retractor for all trim tabs
#123 DR - Dual Actuators L.E.D. Indicator Switch w/Retractor
#123 TNT - Troll'n Tabs L.E.D. Indicator Switch w/Retractor
#125 - For Lenco Drive 164 and hatch lifts.

Standard Switch #124

Lenco switches feature:	124	124 R	123	123 DR	123 TNT
1) Self-contained, sealed keypad	✓	✓	✓	✓	✓
2) Self-contained, sealed control box module	✓	✓	✓	✓	✓
3) Fade/smudge-proof, laser engraved graphics	✓	✓	✓	✓	✓
4) Plug & play switch wiring harness connector	✓	✓	✓	✓	✓
5) Built-in retract feature returns tabs to a fully retracted position when power is removed		✓	✓	✓	✓
6) 2 high-intensity L.E.D. indicator displays show the exact position of your trim tabs at all times			✓	✓	✓
7) Photo eye reads ambient light and adjusts the L.E.D. indicator display intensity for optimum viewing in direct sunlight			✓	✓	✓
8) Backlit keypad graphics for optimum night viewing			✓	✓	✓
9) 24-volt compatibility			✓	✓	✓

OPERATION

The operation of the indicator switch is based on the position of the bow. To lower the starboard bow, press the right (starboard) side of the switch where it reads DOWN. This lowers the port tab. To lower the port bow, press the left (port) side of the switch where it reads DOWN. This lowers the starboard tab. The L.E.D. displays on the sides of the display show how far that tab has moved.

When the ON/OFF switch is turned on at the helm, the L.E.D. displays on the indicator switch show one up arrow on each side of the switch. This shows that both tabs are fully retracted. While functioning the tabs, the L.E.D. displays indicate the position of the tabs by lighting up the further they are pressed down. As the switch is pressed up, the lights go out. When power is removed from the switch, the tabs retract from any position before powering down.

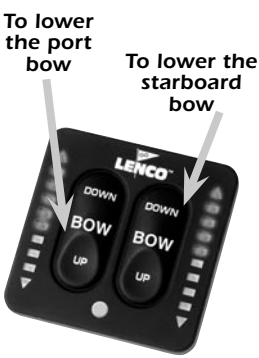

Indicator Switch with Retractor #123

Electric RetroFit Kit for Bennett Trim Tabs Installation Instructions

Lenco Marine's RetroFit Kit is designed as a direct replacement for the Bennett 4-ring standard trim tab actuator. These instructions should be followed completely. If you experience any problems not covered, please call the Lenco Marine customer service line at 772-288-2662.

1) Disconnect the Bennett hydraulic pump unit (HPU) and drain as much of the hydraulic fluid as possible into a container for proper disposal later. Remember that automatic transmission fluid (ATF) is to be disposed of only at an approved collection site in your area; do not discard in the regular trash.

2) Remove the Bennett trim tab cylinder from the boat transom and remove the hydraulic line at the connection. It helps to have several rags handy to soak up the oil. Remove and discard old hydraulic lines.

3) Disconnect the Bennett cylinder from the trim tab plane by tapping out the small black pin at the base of the cylinder where it attaches to the plane. You will first have to remove one screw from the lower bracket as this holds the pin in place. Do not remove the lower bracket, as you will need it later.

4) Attach the Lenco upper bracket supplied in the kit to the Lenco Actuator feeding the wire through the center bracket hole and rubber grommet (see insert). Then insert the 1-1/2" (6.35 cm) black delrin pin though the upper bracket and upper actuator hole. This fits a little tighter than the bottom and will need to be tapped in with a small hammer. Feed the 6' (1.83 m) Lenco Actuator wire through the transom hole where the hydraulic line once was.

5) Before mounting the actuator to the transom you must first bed the back of the bracket and all the screws and wire by coating them with a marine adhesive such as 3M 5200. You will need to clean mounting surfaces on the transom with a cleaning solvent such as mineral spirits or alcohol to remove all oils and dirt before final mounting. Next hold the bracket to the transom and insert the three #14 x 1-1/4" (3.17 cm) screws supplied in the kit into the three existing screw holes and tighten until snug. (Make sure you bed the bracket and all three screws with 3M 5200.)

6) You are now ready to attach the Lenco Actuator to the plane. First insert the pin part way through the hole in the Bennett lower bracket and insert through one of the four black washers provided in the kit. Place the actuator into the bracket and tap the pin through. Continue through the second washer and other side of the bracket. Replace the bracket screw removed in step 3. This will lock the pin in place and prevent it from falling out.

7) Now you will need to hook up the Lenco Actuator wires inside the bilge/rigging area. First cut the wire connector from the Bennett wire harness where the pump used to be. Strip the four harness wires and connect to the four Lenco wires using the heat shrink butt splices provided in the kit. Make sure to use the proper crimping tool and then heat all connections for a tight waterproof seal. Tie-wrap or secure in some fashion to a dry location to help prevent the connectors from getting too wet. For further wiring information, see wiring instructions and diagram on page 15.

Please follow the instructions and drawings carefully. Call the Lenco Service Department at 772-288-2662 for technical assistance.

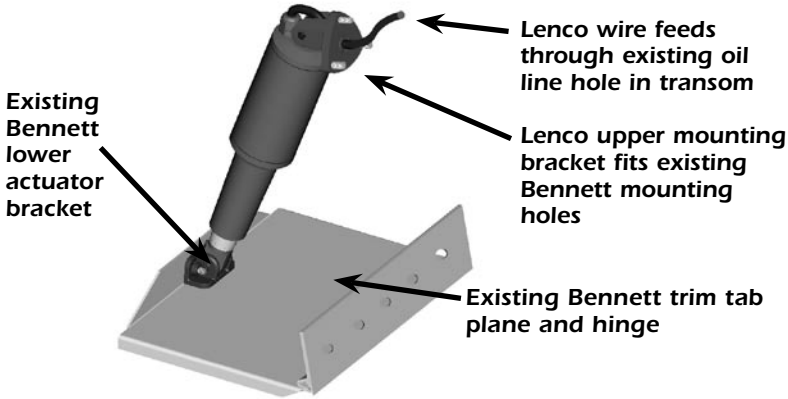

Wiring Instructions for Electric RetroFit Kit for Bennett Trim Tabs

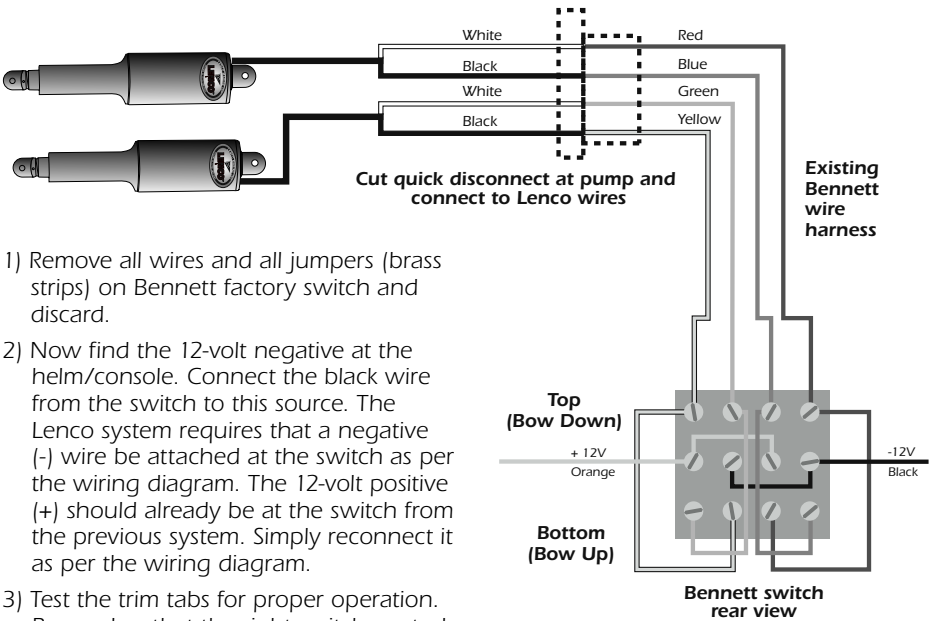

1) Remove all wires and all jumpers (brass strips) on Bennett factory switch and discard.

2) Now find the 12-volt negative at the helm/console. Connect the black wire from the switch to this source. The Lenco system requires that a negative (-) wire be attached at the switch as per the wiring diagram. The 12-volt positive (+) should already be at the switch from the previous system. Simply reconnect it as per the wiring diagram.

3) Test the trim tabs for proper operation. Remember that the right switch controls the left trim tab and the left controls the right. BOW DOWN should extend the tabs while BOW UP should retract them. If for some reason this does not work as described in the above text, recheck all the wiring for a misplaced wire. If still not fully operational, refer to the trim tab troubleshooting guide on page 7 for further instructions.

Use caution when using Lenco Trim Tabs for the first time. The response time is faster than the Bennett system.

Try small taps of the switch until you become accustomed to the new trim tabs.

Upgrading and Retrofitting

Standard Tab to Troll'n Tab

A 9x12 trim tab can be upgraded to Troll'n Tab 9x12 (part #TNT 9x12/24 DVNS) or 12x12 (part #TNT 12x12/24 DVNS).

Standard Tab Blade Upgrade

For a larger trim tab blade a 9x12 blade (part #B 9x12) can be retrofitted with a 12x12 blade (part #B 12x12).

Edge Mount Kit Upgrade

Edge mount kits require approximately 11" (14" for 9" Edge Mount) from the top of the upper bracket to the bottom of the hinge.
Since the placement of the upper bracket is lower then a standard mount, an edge mount can be retrofitted only with another edge mount trim tab (parts: #B 12x9 E, #B 12x12 E, #B 12x18 E, Racing Tabs #BRT 12x12, #BRT 16x12, #BRT 18x14).

Edge Mount Tab to Troll'n Tab

The only Troll'n Tab kit that can upgrade from an edge mount trim tab kit is the TNT 12x12/24 DVNS (part #TNT 12x12/24 DVNS).
Note: In order to utilize the same mounting holes when upgrading from trim tabs to Troll'n Tabs, the trim tabs have to have been mounted with the hinges at least 3/8" (.95 cm) from transom bottom as recommended in Lenco installation instructions.

Standard Mount Kit (Part #TT 9x12 NS)

Can be upgraded to a 12" tab or a 9x12 or 12x12 Troll'n Tab

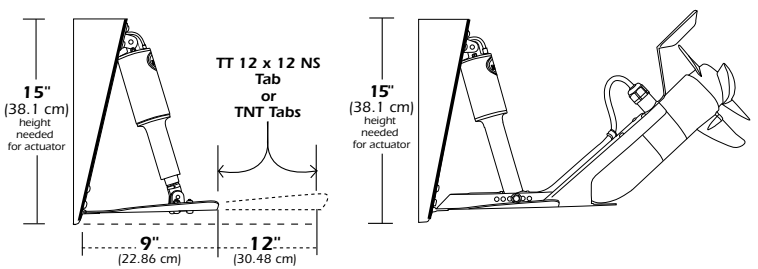

Edge Mount Kit (Part #TT 12x12 ENS)

Can be upgraded to a 16" or 18" tab or a 12x12 Troll'n Tab

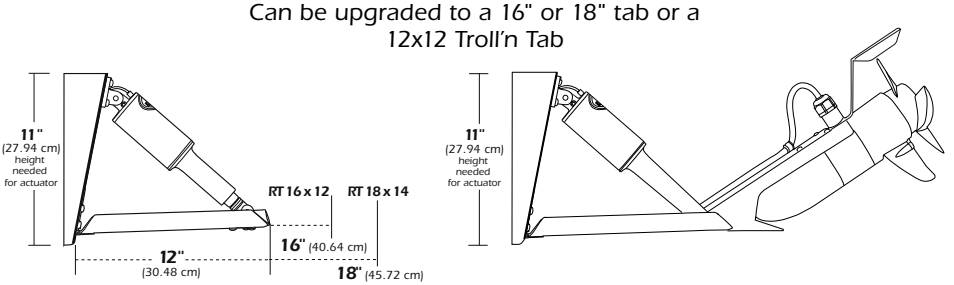

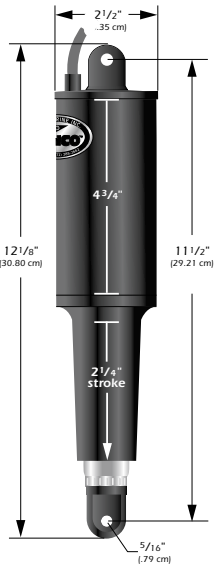

The 101 Actuator is used in most TT & RT kits.

101 Actuator
2 1/4" stroke
Overall length tip to tip = 12 1/8 inches

Part #
101-1, w/25' cable*
101-2, w/6' cable*
101-3, w/6' cable**

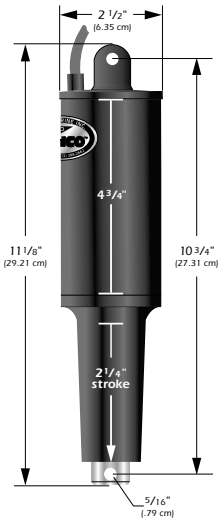

The 101 XD Actuator is used mostly with HD racing kits and on OEM specific tabs.

101 XD Actuator (5/16" mounting hardware)

2 1/4" stroke
Overall length tip to tip = 11 1/8 inches

Part #
101 XD - 1, w/25' cable*
101 XD - 5, w/6' cable*
101 XD - 12, w/6' cable**

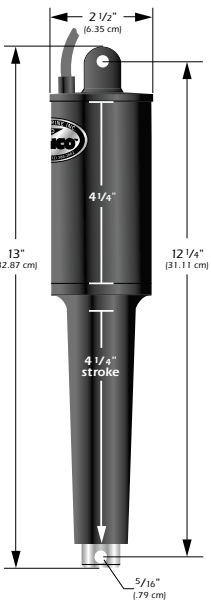

The 102 XD Actuator is used with Troll'n Tab kits only.

102 XD Actuator
4 1/4" stroke
Overall length tip to tip = 13 inches

Part #
102 XD-1, w/25' cable*
102 XD-2, w/6' cable*
102 XD-3, w/25' cable**

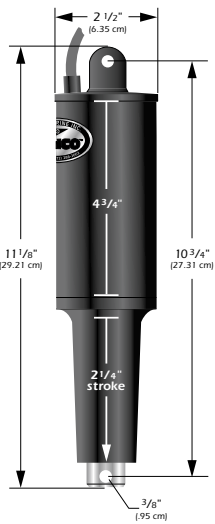

The 101 XD Actuator is used mostly with XD racing kits and on OEM specific tabs.

101 XD Actuator (3/8" mounting hardware)

2 1/4" stroke
Overall length tip to tip = 11 1/2 inches

Part #
101 XD - 7, w/6' cable*
101 XD - 9, w/25' cable*
101 XD - 15, w/35' cable**
101 XD - 16, w/35' cable*

*12 Volt
**24 Volt

The entire Lenco Actuator is fully submersible, maintenance free and sealed for life

Guidelines for trim tab operation located on page 5.

General Information

Please read and retain this manual. The information in this manual describes the proper procedures for installing and maintaining your motors safely.

The description and specifications contained herein were in effect at the time this manual was approved for printing. Every effort has been made to ensure the accuracy of this document. Due to ongoing product improvement, Lenco Marine cannot guarantee the accuracy of printed material after date of publication.

Safety and operating information that is practiced along with good common sense can help prevent personal injury and product damage.

Lenco Drive 164 Trolling Motor System

Safety

Do not modify the system in any way or add accessories not intended for regular use.

Always disconnect power from motor when replacing props, removing debris around props, charging batteries, trailering boat or when the motors are not in use.

Troll'n Tabs Standard Mount & Edge Mount

Wire and Cable Routing Recommendations

Troll'n Tab and Lenco Drive 164 wiring should be installed according to wiring diagrams within this manual and should remain independent of all other electronics.

Extending any wiring associated with the Troll'n Tab and Lenco Drive 164 trolling motor system is not recommended.

Battery Recommendations

12-volt Deep Cycle batteries (Group 27 or higher). The deep cycle trolling motor batteries should be isolated from the main engine battery. Sensitive electronics, depth finders in particular, should be connected directly to the main engine battery.

WARNING
Batteries contain sulfuric acid, which can cause severe burns. Avoid contact with skin, eyes and clothing. The battery also produces hydrogen and oxygen gases when being charged. This explosive gas escapes through the fill vent cell caps and may form an explosive atmosphere around the battery for several hours after it has been charged. Electrical arcing or flames can ignite the gas and cause an explosion that may shatter the battery causing serious injury. Ventilate area well while charging.

Operation of Trolling Motors

To position the motors for trolling use, press BOW DOWN for more than 5 seconds on the trim tab switch or DOWN on the rocker switch for Lenco Drives. This will fully extend both actuators so the motors are parallel with the plane of the hull.

To begin use with the trolling motors, turn the control box ON by flipping the single toggle switch. When the system is activated, you may operate the motors with the foot control that plugs into the control box wire harness.

Direction

The Troll'n Tab and Lenco Drive 164 trolling motor systems maneuver the boat by controlling the direction and the amount of thrust from each of the trolling motors. Pressing down on the heel of the foot control will steer the boat to the left. When the heel is pressed down, the starboard motor thrusts forward and the port motor thrusts in reverse. Pressing down on the toe of the foot pedal steers the boat to the right. When the toe is pressed down, the port motor thrusts forward and the starboard motor thrusts in reverse. The amount of thrust and the direction of thrust gradually change from one motor to the other the further the foot control is pressed down. When the foot control is pressed down all the way to either the toe or heel, the trolling motors are at equal thrust levels, one motor pushing forward, the other pushing in reverse. To track in a straight line, the foot pedal has a center position which is calibrated to equal the amount of thrust and the direction of each motor. This "center" position may not equal a perfectly level foot pedal. The pedal may appear tilted while achieving a straight tracking line.

Foot Control Functions

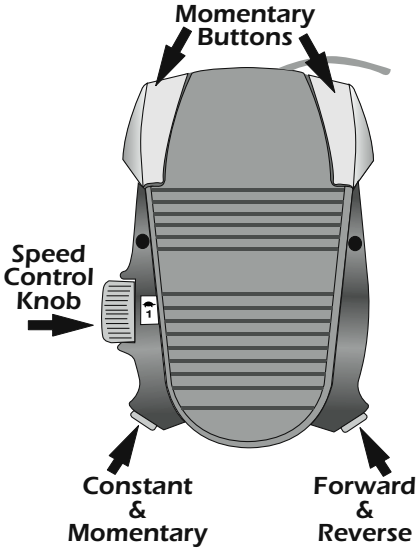

Press BOW DOWN for more than 5 seconds to position TNT trolling motors for use.

Press DOWN for more than 5 seconds to position Lenco Drive 164 trolling motors for use.

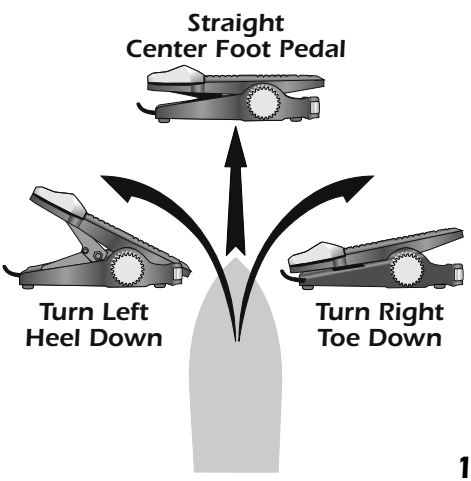

Speed

The speed of the motor can be adjusted to the desired speed by rolling the speed control knob on the left side of the foot control. This is a variable speed system so it offers a full range of thrust levels. This range is marked 1 through 10. Position 1 is marked on the knob by a turtle for the lowest thrust level. A rabbit for the highest thrust marks position 10. Use your foot to roll the speed control knob to the desired setting.

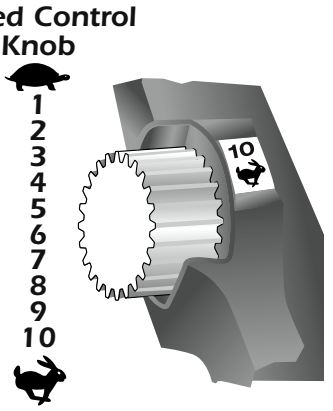

Momentary Mode

When the main control box is turned on, the foot control begins in the momentary mode. Each time one of the gray momentary buttons is pressed, the motors activate; when released the motors stop. When activated, the motors run at the speed controlled by the setting of the speed control knob.

Constant Mode

To set the foot control to the constant mode, press the small gray button on the left at the base of the foot control one time. This mode allows the motors to run constantly at the speed selected on the speed control knob.

Constant Mode Steering Adjustments

When the foot control is set in the constant mode, it is possible to make small directional adjustments. To make each adjustment, press the right or left gray momentary buttons one time. This allows, the boat to track 5 percent in the desired direction. If one of the two momentary buttons is pressed and held down, the boat continues to go in that direction until the button is released or the opposite button is pressed.

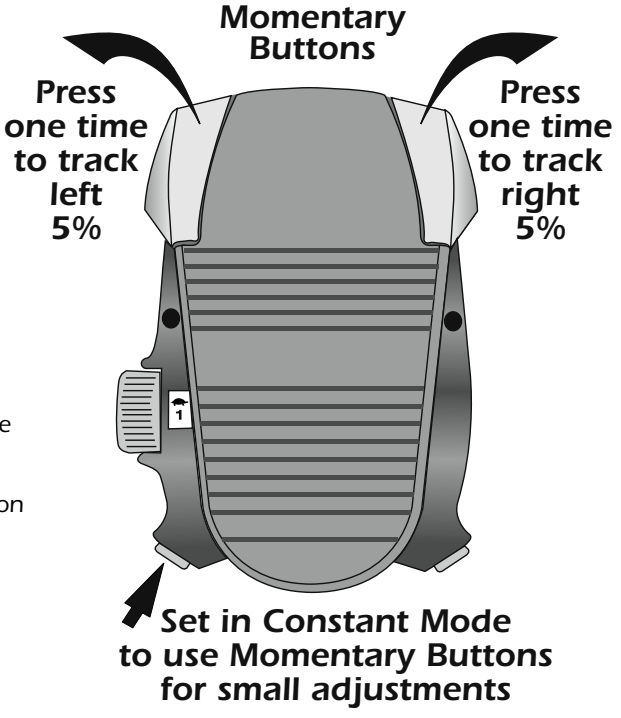

Forward and Reverse

When the main control box is turned on, the foot control begins in forward. To set the foot control to the reverse mode, press the small gray button on the right at the base of the foot control one time. This reverses all of the functions described above. This setting is most effective and used most often when the foot control is set at the center position. This function is helpful to back up out of tight areas and maneuver away from obstructions.

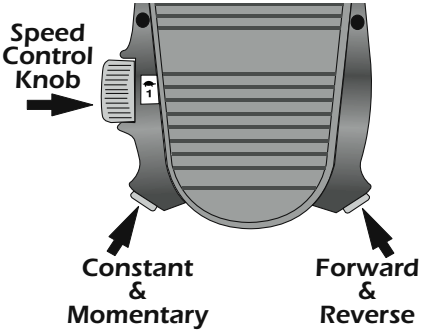

On the Water

Lenco Marine would like your first experience with your new Troll'n Tab or Lenco Drive 164 trolling motor system to be enjoyable. Please take your time and walk through the previously mentioned settings. You will learn how to calibrate the motors in the momentary, constant and straight ahead positions to maximize the systems full potential.

Special Recommendations for Troll'n Tabs & Lenco Drive 164

Make sure that the control box is switched to OFF after use.

Troll'n Tab System Parts (See page 31 for Lenco Drive parts.)

1	Stainless steel electro-polished blade with hinge (dimensions of tab)	#BTNT 9x12
2	Trolling motor bracket	Bracket
3	Motorguide 24v-82lbs	#MG24DV-82
4	Motorguide Machette II (3 blade prop)	Prop
5	Anti-cavitation plate	
6	#124 - Standard Tactile Switch (optional)	#124
7	#123 TNT - Troll'n Tab L.E.D. Indicator Switch w/Retractor (optional)	#123 TNT
8	Electromechanical Actuator	#102 XD
9	Upper mounting bracket	#118
10	Lower mounting bracket	#119
11	Delrin pin	#121
12	Shim kit (optional)	#118S
13	TNT control box with wire harness and terminal strip	#TNTCB
14	TNT foot control	#TNTFC
15	Nylon spacers	
16	5/16" (.79 cm) Machine lock nut	
17	5/16" x 2-1/4" (.79 x 5.72 cm) machine bolt	

Digital Trolling Motor Troubleshooting Guide for Troll'n Tabs and Lenco Drive 164

1. Electric actuators work but trolling motors do not.

Solution Sequence:

1.1 Check system **On/Off** switch located on the main control box. Ensure that the switch is in the ON position.

1.2. Check the foot control connector located on the wire harness attached to the main control box. Verify that it is fully inserted and corrosion-free.

1.3 Inspect the in-line fuse located on the positive battery cable near the terminal strip. If the fuse is blown, the motors will not work. Replace the fuse if necessary.

1.4 Verify that all connections at the main control box terminal strip are accurate and tight as per Troll'n Tab wiring diagram.

1.5 Assess the system batteries state of charge. Set both motors on FWD and on a high speed with the foot control. Check the voltage of each battery independently. Voltage should read 12.0 volts minimum. Charge batteries if necessary.

2. One motor works and the other does not.

Solution Sequence:

2.1 Verify that the foot control connector on the main control box wiring harness is fully inserted and corrosion-free.

2.2 Verify that all connections at the main control box terminal strip are tight and accurate as per Troll'n Tab wiring diagram.

2.3 To check motors independently:
a) For 5 wire motors — take the RED motor wire and connect it to the GREEN motor wire of the same motor.
b) For 4 wire motors — take the GREEN wire of the motor to the POSITIVE side of the first battery in the 24V series.
In both instances, motor should run at a single (constant) speed.

2.4 Foot Control Test: Visually examine the rocker on the foot control unit for damage. Operate all switches through their normal switching positions. The switches should positively engage and maintain the various switched positions. If the foot control is damaged or defective, contact the factory at 772-288-2662 for repair or replacement.

3. Batteries have been completely discharged; however, when onboard charger was activated it indicated a green light, representing a fully charged battery.

Solution Sequence:

3.1 The battery or batteries have been discharged below 5 volts. When the batteries have been discharged to such extent, the onboard charger can no longer bring the batteries up. The onboard charger has been designed to be completely waterproof, therefore the unit is totally sealed and will generate too much heat attempting to restore the batteries from such a level of depletion. The solution to this dilemma is to first unplug the onboard charger and attach a 10-amp household charger for 20-30 minutes. This brings the state of charge up to a level that the onboard unit can effectively take over. After 20-30 minutes, disconnect the household charger and allow the onboard unit to complete the charging process.

4. Charger is connected but no lights appear on unit.

Solution Sequence:

4.1 Check the 110-volt AC power supply from its source through all connecting points up to the charger by using a meter or lamp to confirm that current is being delivered to the charger. If 110-volt AC power supply is connected to a safety GFCI outlet, be sure that the outlet is in the reset position and that current is present.

Note: Always verify that the charger lights are on when attempting to charge batteries.

If you are still experiencing other problems or difficulties not described in this guide, please contact our Parts Department at 772-288-2662.

Trolling Motor Wiring for Troll'n Tabs & Lenco Drive 164

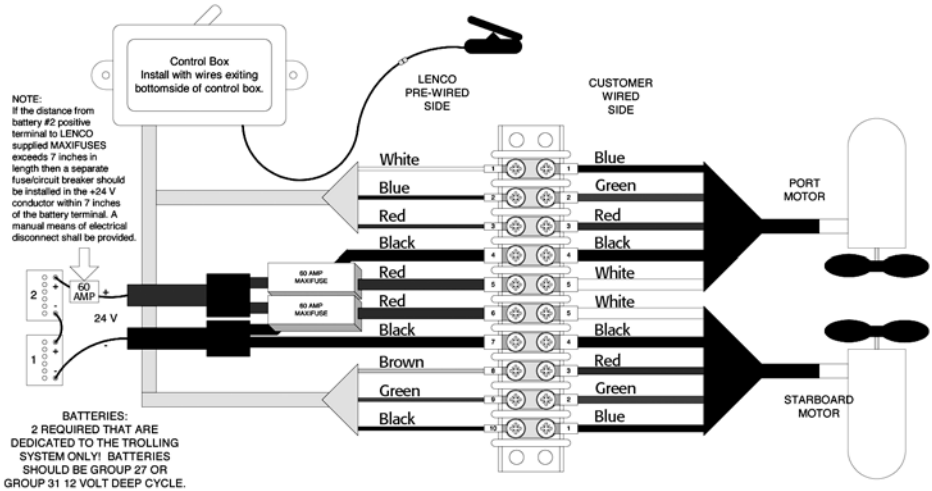

Standard 10 Position Terminal Block Using Two 5 Wire Motors
and a 6 Wire Control Box
For alternate solutions, visit our web site www.lencomarine.com

Digital Trolling Motor Wiring Instructions for Troll'n Tabs and Lenco Drive 164

1. Determine TNT main control box mounting location. Mount control box and numbered terminal strip. Keep in mind the two wire harnesses running from the main control box, one to the foot control and one to the terminal strip, are both 25' (7.62 m) in length.
2. Route the trolling motor wires to the terminal strip.
3. Connect the port trolling motor to the terminal strip:
   - blue #1 to white #1,
   - green #2 to blue #2,
   - red #3 to red #3,
   - black #4 to black #4,
   - white #5 to red #5.
4. Connect the starboard trolling motor to the terminal strip:
   - white #5 to red #6,
   - black #4 to black #7,
   - red #3 to brown #8,
   - green #2 to green #9,
   - blue #1 to black #10.
5. With the control box off, connect 24 volts to the pigtails located on the terminal strip using #6 AWG marine grade battery cable. The 60-amp fuse for the system has been installed to protect the main control box at the factory. It is strongly advised to install an inline 60-amp fuse or breaker on the positive wire at the battery to protect battery cables.

General Information

Please read and retain this information. It describes the proper procedures for safely installing and maintaining your motors.

The description and specifications contained herein were in effect at the time this manual was approved for printing. Every effort has been made to ensure the accuracy of this document. Due to ongoing product improvement, Lenco Marine cannot guarantee the accuracy of printed material after date of publication.

Safety and operating information that is practiced along with good common sense can help prevent personal injury and product damage.

Safety

Do not modify the system in any way or add accessories not intended for regular use. Always disconnect power from motor when replacing props, removing debris around props, charging batteries, trailering boat or when the motors are not in use.

Wire and Cable Routing Recommendations

Troll'n Tab wiring should be installed according to wiring diagrams within this manual and should remain independent of all other electronics.

Extending any wiring associated with the Troll'n Tab system is not recommended.

Battery Recommendations

12-volt Deep Cycle batteries (group 27 or higher).The deep cycle trolling motor batteries should be isolated from the main engine battery. Sensitive electronics, depth finders in particular, should be connected directly to the main engine battery.

WARNING
Batteries contain sulfuric acid, which can cause severe burns. Avoid contact with skin, eyes and clothing. The battery also produces hydrogen and oxygen gases when being charged. This explosive gas escapes through the fill vent cell caps and may form an explosive atmosphere around the battery for several hours after it has been charged. Electrical arcing or flames can ignite the gas and cause an explosion that may shatter the battery causing serious injury. Ventilate area well while charging.

Tools and Materials List:

- Electric drill
- Wire crimper/cutter
- 3/16" & 3/8" (.48 & .95 cm) drill bits
- Tape measure
- 7/16" (1.11 cm) wrench
- Small hammer
- 4' (1.22m) level/straight edge
- 3M 5200 Adhesive Caulking
- 2" (5.08 cm) hole saw
- #2 & #3 Phillips screwdrivers

Digital TNT Installation Instructions

WARNING: The following instructions contain important safety information and should be followed carefully. Failure to do so may result in injury and will void warranty.

Please read complete instructions before starting application!

1. Begin by first deciding where the trolling tab kit will mount. **Note:** When laying out desired tab location, hold tab against transom 3/8" (.95 cm) up from bottom of transom in line with hull. Make sure not to mount inside corner of hinge within 2" (5.08 cm) of a strake edge. If this is not possible, move tab so as to cover strake edge (see Fig.1).

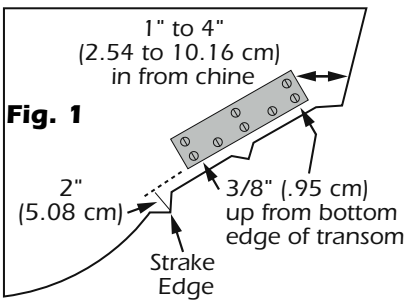

2. Using the 3/16" (.48 cm) drill bit, drill hinge holes to a depth of 1-1/4" (3.17 cm). When drilling tab and bracket holes, you may drill through the transom; the screws will seal the holes when inserted. All screws and fasteners are stainless steel. Do not use any other type of metal. We recommend using 3M 5200 adhesive caulking to bed the hinge and screws. Next, mount the hinge to the boat using the 1-1/4" (3.17 cm) stainless steel sheet metal screws.

3. Attach the actuator to the upper mounting bracket using the 5/16" (.79 cm) stainless steel hardware provided. In order to position upper bracket against transom, you must lift trim tab so that the trailing edge is approximately 5/8" (1.59 cm) above a straight edge held to hull. This 5/8" (1.59 cm) measurement is for all tabs that have a trailing edge 9" (22.86 cm) off of the transom. If the trailing edge is 12" (30.48 cm) off of the transom, lift the tab so there is 3/4" (1.9 cm) between the tab and the straight edge (see Fig. 2). When the tab is at the appropriate level, use the two outside holes of the upper bracket as a guide to mark mounting location. Mount upper

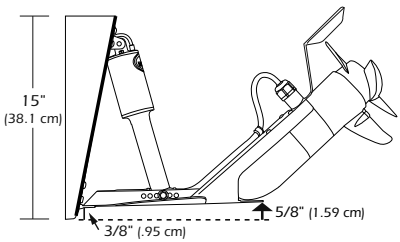

Fig. 2

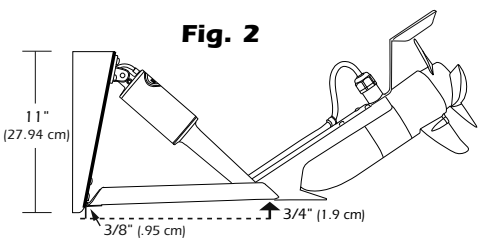

bracket where it lays naturally against the transom to prevent binding during travel. (Do not adjust the upper bracket to the right or left, this will cause binding.) Remove upper bracket from actuator to mark upper screw hole. Drill 3/16" (.48 cm) holes 2-1/4" (3.17 cm) deep.

4. **Warning:** With some installations, fuel, water tanks or other systems may prevent the actuator wire from entering the hull through the upper mounting bracket. Be sure to check inside hull before drilling 3/8" (.95 cm) wire hole. Using the center hole in the upper mounting bracket as a guide, mark the wire hole. If all is clear, use the 3/8" (.95 cm) drill bit and drill a hole through the transom. Drill completely through the transom. Pass the actuator cable through. Remove slack on wire into hole and seal with clear caulking or 3M 5200. Mount upper bracket using the three 2-1/2" (6.35 cm) stainless steel

(continued)

sheet metal screws. (We recommend using 3M 5200 adhesive caulking to bed the screws and bracket. **DO NOT OVERTIGHTEN.** If, however, you are prevented from drilling hole through bracket, simply drill a 3/8" (.95 cm) hole 4" to 5" (10.16 to 12.7 cm) above waterline and insert wire. Cover hole and wire with a clamshell vent sealed with clear caulking for a waterproof and finished effect.

5. At the helm, find a good location for the tactile switch and cut a circular opening using a 2" (5.08 cm) hole saw. Before cutting make sure the area inside the helm is clear of wires and other equipment that could be damaged. Using the template located in the owner's manual on page 35, mark each stud and drill four 3/16" (.48 cm) holes through the helm. If the thickness of the helm is less than 1-1/4" (3.17 cm) secure the switch with the nylon nuts provided. If the thickness of the helm exceeds 1-1/4" (3.17 cm) apply a marine grade silicon sealer to each of the four drilled holes, to each stud and around the back of the tactile switch. Secure the switch and allow sealer to dry. When mounting the black control box, keep in mind that there is a three-foot lead that attaches to the back of the tactile switch. Make sure control box is mounted with wires facing down toward deck. Refer to trim tab wiring diagram on page 7. Be sure to mount the control box with the wires facing down toward the deck.

6. Following the trim tab switch wiring diagram, pull the 25' (7.62 m) actuator wires to the trim tab control box location. Be very careful of sharp edges that may damage the cable. Hook up according to diagram. Remember the left switch controls the right starboard tab and the right switch controls the left port tab.

7. With the trim tabs operating as described, you are now ready to wire the trolling motors, batteries and control box. First, select a place to mount the control box that allows access to **On/Off** switch. As an option, control box may be mounted in the console.

8. Next, run trolling motor leads to the terminal strip. You may run leads through the splash well drains on either side of the engine, then into the rigging hatch with the engine control/steering cables. Attach wires to terminal strip according to wiring diagram provided. If splash-well drains are not an option, you may need to drill a 1/2" (1.27 cm) hole 4" to 5" (10.16 to 12.7 cm) above waterline and insert wire. Cover hole and wire with a clamshell vent sealed with clear caulking or 3M 5200 for a waterproof and finished effect.

9. When wiring from batteries to the control box, use a minimum of #6 AWG wire. Also, note that the 24V power lead is fused near the positive battery terminal. Fuse is 60-amp maxi fuse. **Warning:** Use of fuses larger than 60-amp could result in damage to system and will void warranty. For replacement fuse, call your local auto parts retailer or call Lenco Marine, Inc. for assistance.

10. To install trolling motor propellers, insert cotter pin through trolling motor shaft. Place the prop onto trolling motor shaft and line up the back of the prop with the cotter pin. Using the nylon prop nut provided secure prop to motor.

******ATTENTION INSTALLER******
After you tighten the nuts on the props, be sure to install two #4 screws into each prop nut. Failure to properly secure prop nuts with two screws on each prop will result in lost props when motors are reversed. Also make sure 4 nuts for motor bracket are secure to prevent the motor shifting in its housing.

11. ***SPECIAL APPLICATION***
In the event of a recessed pocket application, use of shims behind the upper bracket may be necessary to prevent actuator binding during extension. You can adjust the actuator in the lower channel holes to obtain the 5/8" (1.59 cm) up dimension.

Lenco Troll'n Tabs, Lenco Drive 164 and Lenco Hatch Lifts carry a 2-year limited warranty from the date of original purchase.

When possible, please refer to our troubleshooting guide on our website, http://www.lencomarine.com prior to processing your claim with the Lenco factory.

1. Call Lenco Marine at 772-288-2662, and ask for customer service. Give the technician a brief description of the product and the problem. Once the tech determines that the product is eligible for repair or replacement, they will issue you an RMA number (Return Merchandise Authorization). **Claims will not be processed without an RMA number.**
2. Return product and paperwork to Lenco Marine with the following information: name, telephone number, description of problem, proof of purchase to verify warranty. Proof of purchase and warranty info can consist of the following:
   A. Original Lenco Marine invoice or copy.
   B. Lenco Dealer invoice.
   C. Factory installed bill of sale
3. Mark the outside of the package with the RMA number and return it to Lenco Marine Customer Service Department at 4700 SE Municipal Court, Stuart, FL 34997 for processing. Once received, our Customer Service Department will make every effort to process your return quickly. Should time restraints prohibit you from sending in the merchandise first, or you need an immediate replacement, you will be required to secure the replacement part with a credit card prior to shipment (Visa, MasterCard, American Express, Discover). Lenco Marine ships all warranty items UPS ground. Costs for upgrades in shipping are the responsibility of the customer. Lenco Marine warranties all Troll'n Tabs for a period of 2 years from the date of original purchase. If any part of a Lenco Troll'n Tab or Lenco Drive fails due to manufacturing defects or workmanship within a period of 2 years from the date of original purchase, Lenco Marine will repair or replace the part(s) without charge at our discretion. No haul out, labor or miscellaneous charges are covered under this warranty. Warranty is not transferable.

Trim Tab and Hatch Lift customers please see separate warranty policy. The foregoing is in lieu of any and all other warranties, expressed or implied, including any warranty of merchantability or fitness for a particular purpose. There are no other warranties which extend beyond that set forth above. Lenco Marine reserves the right to void any warranty claim if the part is opened or repair was attempted without prior authorization from Lenco Marine.

Lenco Marine Inc.
Phone: 772-288-2662
Fax: 772-288-2566
www.lencomarine.com
4700 SE Municipal Court
Stuart, FL 34997

General Information

Please read and retain this information. It describes the proper procedures for safely installing and maintaining your motors.

The description and specifications contained herein were in effect at the time this manual was approved for printing. Every effort has been made to ensure the accuracy of this document. Due to ongoing product improvement, Lenco Marine cannot guarantee the accuracy of printed material after date of publication.

Safety and operating information that is practiced along with good common sense can help prevent personal injury and product damage.

Safety

Do not modify the system in any way or add accessories not intended for regular use. Always disconnect power from motor when replacing props, removing debris around props, charging batteries, trailering boat or when the motors are not in use.

Wire and Cable Routing Recommendations

Troll'n Tab wiring should be installed according to wiring diagrams within this manual and should remain independent of all other electronics.

Extending any wiring associated with the Troll'n Tab system is not recommended.

Battery Recommendations

12-volt Deep Cycle batteries (group 27 or higher).The deep cycle trolling motor batteries should be isolated from the main engine battery. Sensitive electronics, depth finders in particular, should be connected directly to the main engine battery.

WARNING
Batteries contain sulfuric acid, which can cause severe burns. Avoid contact with skin, eyes and clothing. The battery also produces hydrogen and oxygen gases when being charged. This explosive gas escapes through the fill vent cell caps and may form an explosive atmosphere around the battery for several hours after it has been charged. Electrical arcing or flames can ignite the gas and cause an explosion that may shatter the battery causing serious injury. Ventilate area well while charging.

Tools and Materials List:

- Electric drill
- Wire crimper/cutter
- 3/16" & 3/8" (.48 & .95 cm) drill bits
- Tape measure
- 7/16" (1.11 cm) wrench
- Small hammer
- 4' (1.22m) level/straight edge
- 3M 5200 Adhesive Caulking
- 2" (5.08 cm) hole saw
- #2 & #3 Phillips screwdrivers

Lenco Drive 164 Installation Instructions

Warning: The following instructions contain important safety information and should be followed carefully. Failure to do so may result in injury and will void warranty.

Please read complete instructions before starting application!

1. Begin by deciding where the Lenco Drive Kit will mount.

Note: When mounting Lenco Drive, hold hinge to transom 1/2" (1.27 cm) from bottom of transom, and approximately 2" (5.08 cm) or more in from the chine, level with the waterline. (The wider they are mounted the better they will operate.)

Fig. 1

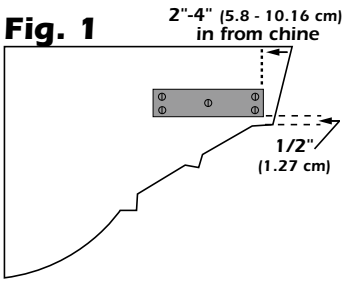

2. Using a 3/16" (.47 cm) drill bit, drill hinge holes to a depth of 1-1/4" (3.17 cm). Note: When drilling drive and bracket holes, you may drill through the transom, the screws will seal the holes when inserted. All screws and fasteners are stainless steel. Do not use any other type of metal. We recommend using 3M 5200 Adhesive Caulking to bed the hinges and screws.
3. Mount the hinge to boat using 1-1/4" (3.17 cm) stainless steel metal screws.
4. Attach upper mounting bracket to top of actuator using the 5/16" (.79 cm) nut and bolt provided. Ensure actuator is fully retracted before proceeding to next step!
5. Lift the Lenco Drive up and allow the actuator to fall naturally on the transom, ensure that there is at least 1" (2.54 cm) of clearance from transom to Lenco Drive, and mark outer drill holes. Remove bracket and use as template for marking the rest of the holes.
6. Drill bracket holes in transom using 3/16" (.48 cm) drill bit to a depth of 2-1/2" (6.35 cm).
7. **Warning:** With some applications. fuel, water tanks or other systems may prevent actuator wire from entering the hull through the upper mounting bracket. Be sure to check inside before drilling 3/8" (.95 cm) wire hole. If you cannot drill through bracket see "Special Note #1".

Continued on page 30.

Fig. 2

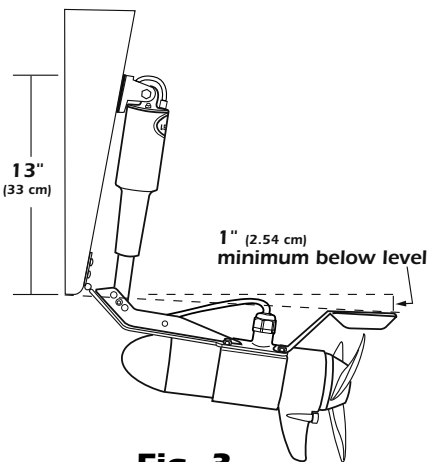

Fig. 3

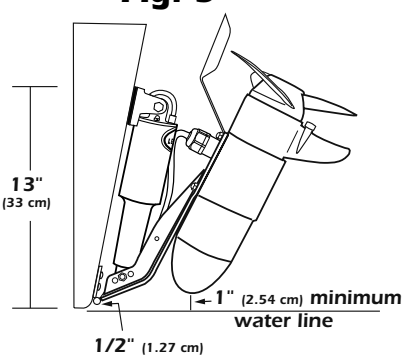

Lenco Drive 164 Installation Instructions

Continued from page 29.

8. If all is clear, use the center lower bracket hole as a guide mark and drill a 3/8" (.95 cm) hole in transom. Drill completely through the transom.
9. Reattach bracket to actuator with provided 5/16" (.79 cm) nut and bolt.
10. Pass actuator cable through the transom, remove slack on cable into hole and seal with 3M 5200 Adhesive Caulking. Do not strain cable while pulling. If you are prevented from drilling through bracket see "Special Note #1".
11. Mount bracket using three 2-1/2" (6.35 cm) stainless steel sheet metal screws. We recommend using 3M 5200 Adhesive Caulking to bed the hinges and screws.
12. At the helm, find a good location for the rocker switch. Lay out template and cut out rectangle for switch.
13. Following the switch wiring diagram, pull the actuator cable to the switch. Be careful of sharp edges that may damage the cable. Connect wiring according to the diagram.
14. With the Lenco Drives operating as described, you are ready to wire the trolling motors, batteries and control box. First, select a place to mount control box and terminal strip. Be sure to mount the control box with the wires facing down toward the deck.
15. Next, run trolling motor leads to the terminal strip. You may run leads through the splash well drains on either side of the engine, then in to rigging hatch with other engine/ steering control cables. If splash well drains are not an option see "Special Note #1".
16. Attach trolling motor wires to terminal strip according to wiring diagram provided.
17. When wiring batteries to control box, use a minimum of #6 AGW wire. Also note we suggest that the 24-volt power lead be fused near the positive battery terminal. The fuse in the system is a 60-amp maxi fuse. **Warning:** Use of fuses larger then 60 AMPS could result in damage to system and will void warranty. For replacement fuse, check your local auto parts retailer or call Lenco Marine, Inc. for assistance.
18. To install trolling motor propellers, insert pin in motor shaft, place prop on shaft and line up back of prop with shear pin. Use nylon prop nut to secure prop to motor. Drive two #4 screws into each prop nut to secure. **Warning:** Failure to secure prop nut with screws will result in lost props when reversing.

SPECIAL NOTE #1: If drilling a hole at the appointed location is not an option, you may drill the appropriate sized hole 4" (1.22 m) to 5" (12.7 cm) above the water line and insert cable. Cover hole and cable with a clamshell vent sealed with clear caulking or 3M 5200 for a waterproof and finished effect.

To mount Switch #125, cut a hole 7/8" (2.22 cm) wide by 1-3/4" (4.44 cm) high

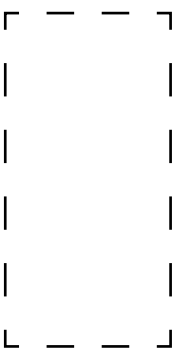

Lenco Drive 164 Wiring Instructions

For trolling motor wiring instructions, see page 23.
For operation and maneuvering instructions, see page 19-21.

Wiring Diagram Part #125 Single Rocker Switch

Rocker Switch view from back

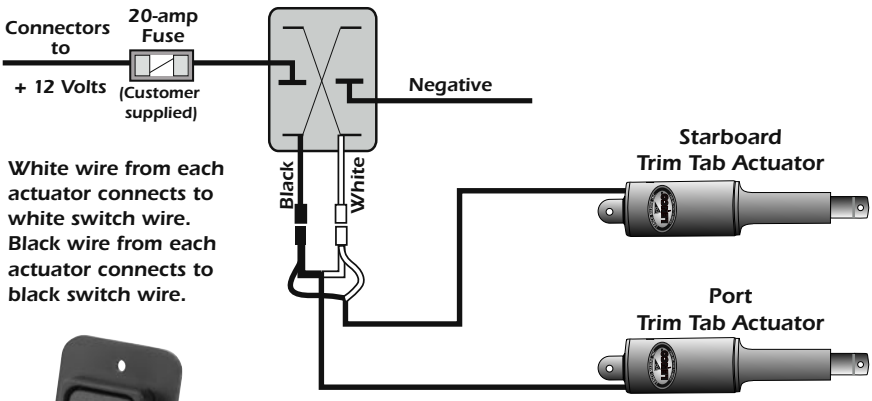

Single Rocker Switch #125

Lenco Drive 164 Trolling Motor System Parts

1	Trolling motor bracket	Bracket
2	Motorguide 24v-82 lbs.	#MG24DV-82
3	Motorguide Machette II (3 blade prop)	Prop
4	Ant-cavitation plate	
5	#125 - Single Rocker Switch	#125
6	Electromechanical Actuator	#101 XD
7	Upper mounting bracket	#114
8	TNT control box with wire harness and terminal strip	#TNTCB
9	TNT foot control	#TNTFC
10	Nylon spacers	
11	5/16" (.79 cm) machine lock nut	
12	5/16" x 2-1/4" (.79 x 5.72 cm) machine bolt	

Lenco Hatch Lift Installation/Operation

Due to the many different variables involved with the numerous applications for Lenco hatch lifts, installation is never the same. Here are some general guidelines that can be of assistance:

- The actuator is most powerful when it is installed vertically at 90 degrees.
- Lifting capabilities decrease the closer the upper or lower mount is located to the hinge.
- The further from a vertical position the less lifting capability. When retracted, **Do Not** position hatch lift at an angle less than 30 degrees.
- Dual actuator systems are recommended for hatches over 500 pounds (226.79 kg).
- Lenco hatch lifts are designed around a ball screw that spins freely when hatch is fully open or closed.
- For installation, it is important that the hatch lift is able to disengage itself at the fully retracted position.
- The ram must be allowed to free spin at both ends of its stroke or it will continue to push or pull against any resistance potentially damaging the hatch lift ot the hatch itself.
- Failure to make accurate measure could cause damage to hatch lift or the hatch itself.
- Lenco hatch lifts are fully submersible and will not drift.
- Lenco hatch lifts are offered in both 12 and 24 volts.

OPERATION

The function of the Lenco Hatch Lift system is simple. Since the hatch lift is based around a ballscrew it is able to push or pull a heavy load and remain at a constant position. To raise a load, extend the hatch lift by pressing on the upper part of the switch. To lower a load, retract the hatch lift by pressing the lower part of the switch.

In case of power failure, Lenco hatch lifts are supplied with two clevis pins at the mounting brackets. To pull this pin out while the hatch is closed, you must rig it to a point outside of the hatch.

Lenco Hatch Lifts come with a 2-year limited warranty from the date of original purchase. See page 27 for details.

S = Short. All part numbers ending in S have the same stroke but in a 4" (10.16 cm) shorter length.

Part Number	L. O. A. Retracted	Approx. Stroke	L. O. A. Extended
HL-400	15"	4"	19"
HL-800S	21"	8"	29"
HL-800	25"	8"	33"
HL-1200S	25"	12"	37"
HL-1200	29"	12"	41"
HL-1600S	29"	16"	45"
HL-1600	33"	16"	49"
HL-2000S	33"	20"	53"
HL-2000	37"	20"	57"
HL-2400S	37"	24"	61"
HL-2400	41"	24"	65"

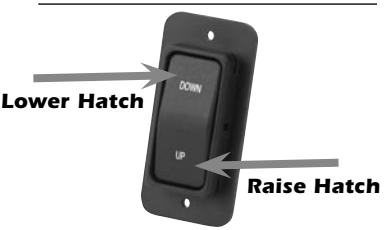

Single Rocker Switch #125

Lenco Hatch Lift Mounting

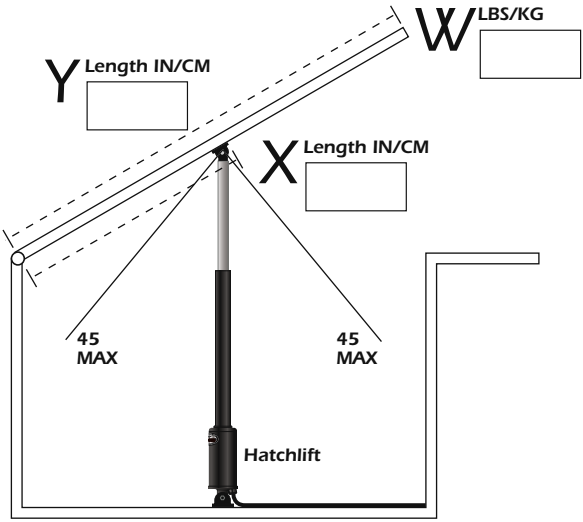

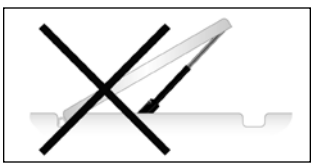

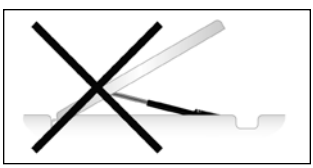

YxW÷X=Force

1. Follow the chart above to figure out load on the hatch lift. Maximum load is 500 lbs. (226.79 kg)

Y = Total length of hatch

X = Length from the hinge to the hatch lift mounting point

W = Weight of the hatch to be lifted

2. Determine the angle of the hatch lift mount. Do not exceed 45 degrees from center.
3. Mount the hatch lift on the desired location as per the above instructions. **Important**: It may be necessary to shim the upper or lower mounting bracket up or down so the hatch does not bind when fully closed. The hatch lift does not stop pulling until it has reached its fully closed position. If the hatch fully closes before the hatch lift is fully retracted, it will cause damage to the lift or the mounting hardware. Shim the hatch lift with stainless washers for small amounts of length. Use Lenco part #118S for lengths greater then 1/8" (3 mm).
4. Wire to switch according to the hatch lift wiring diagram in the owners manual supplied with the hatch lift.

SYSTEM PARTS

1	Hatch Lift (electromechanical actuator)	#'s HL-400, HL-800, HL-800s, HL-1200, HL-1200S, HL-1600, HL-1600S, HL-2000, HL-2000S, HL-2400, HL-2400S
2	Mounting brackets	#119
3	Clevis pins	#121SS
4	Single rocker switch	#125 (optional)
5	Slide bracket	#HLSB (optional)

Standard Trim Tab Kits

- Standard trim tab kits include: two #101 actuators, two 12-gauge stainless steel trim tabs and all mounting hardware. See switch selections on page 13 for available options.
- Available in standard mount and edge mount (space saver mount).
- Sizes range from 9" x 9" to 12" x 50" (22.86 x 22.86 to 30.48 x 127 cm). Measurements taken L x W.

Switches: See selections on page 13 for available options.

Troll'n Tab Kits

- Troll'n Tab kits include: two #102 XD actuators, two 12-gauge stainless steel electro-polished tabs, two Motor guides—digital 82-lb thrust trolling motors with anti-cavitation plates, one digital foot control pedal, one trolling tab control box and all mounting hardware. See switch selections on page 13 for available options.
- Available in sizes: TNT 9x9/24 DVNS, TNT 9x12/24 DVNS, TNT 12x12/24 DVNS (edge mount).

Lenco Drive 164 Trolling Motor Kits

- Lenco Drive kits include: two #102 XD actuators, two Motor Guides—digital 82-lb thrust trolling motors with anti-cavitation plates, one digital foot control pedal, one single rocker switch #125, one trolling tab control box and all mounting hardware.

High Performance Tab Kits

RT Standard

- Standard high performance tab kit includes: two #101 actuators, two 12-gauge stainless steel black powder coated trim tabs and all mounting hardware.
- Available in sizes: RT 9x9 NS, RT 9x12 NS, RT 12x9 NS, RT 12x12 NS, RT 14x12 NS, RT 16x12 NS and RT 18x14 NS.

RT Heavy Duty

- Heavy duty high performance tab kit includes: two #101 XD actuators, two 12-gauge stainless steel black powder coated trim tabs w/transom back plates and heavy duty hinge with 5/16" (.79 cm) hinge rod.
- Available in sizes: RT 12x12 HDNS, RT 16x12 HDNS, RT 18x14 HDNS.

RT Extreme Duty

- Extreme duty high performance tab kit includes: two #101 XD actuators (RT 17x12 XDNS), four #101 XD actuators (RT 19x14 XDNS) on two 10-gauge stainless steel black powder coated trim tabs w/transom back plates and super duty hinge with 3/8" (.95 cm) hinge rod.
- Available in sizes: RT 17x12 XDNS, RT 19x14 XDNS.

Switches: See selections on page 13 for available options.

RT 12x12 NS

RT 16x12 HDNS

RT 19x14 XDNS

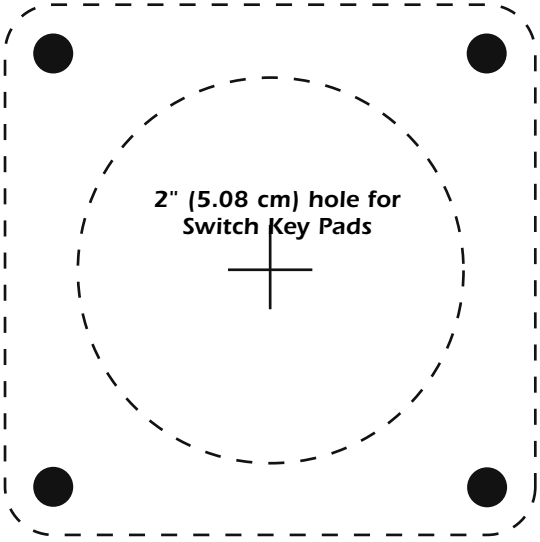

Tactile Switch Connection

Mount control box within 3' (.91 m) of keypad. Control box wire harness is 3' in (.91 cm) length

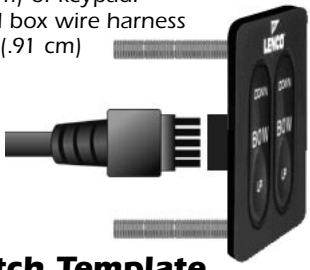

Switch Template

Cut out at the dashed line and place over the 2" (5.08 cm) hole you drilled. Drill straight through the black circles using 3/16" (.48 cm) drill bit for the mounting bolts. (The bolts are part of the switch.) The inner circle should be cut out to allow for the connection.


DON'T WORRY...
135
MERCURY
OptiMax
135
MERCURY
OptiMax
we've got your back.
LENCO MARINE INC.
LENCO™
STUART, FL (772) 288-2662
Lenco Marine Inc., 4700 Municipal Court ▪ Stuart, Florida 34997
772-288-2662 ▪ 772-288-2566 fax ▪ www.lencomarine.com
2-07